MARKER CODE				

STUDENT ENROLMENT NUMBER (SEN)									

TONGA FORM SIX CERTIFICATE 2018

DESIGN TECHNOLOGY

QUESTION AND ANSWER BOOKLET

Time allowed: 3 Hours

INSTRUCTIONS:

1. Write your **Student Enrolment Number (SEN)** on the top right-hand corner of this page.
2. This examination has **FIVE MAJOR AREAS**. Each **AREA** is out of 70 skill level.

MAJOR OUTCOMES	TOPICS
	Choose **ONE** (Major 1 – Major 5)
MAJOR AREAS	
1	**WOOD TECHNOLOGY**
2	**METAL TECHNOLOGY**
3	**FOOD TECHNOLOGY**
4	**TEXTILES AND GARMENT CONSTRUCTION**
5	**TECHNICAL GRAPHICS**

3. Answer ALL QUESTIONS. Write your answers in the spaces provided in this booklet.
4. Use a **BLUE** or **BLACK** ball point pen only for writing. Use a pencil for drawing if required.
5. If you need more spaces for answers, ask the supervisor for extra paper. Write your **Student Enrolment Number (SEN)** on each additional sheet, number the questions clearly and insert them in the appropriate places in this booklet.
6. Check that this booklet contains pages 2-71 in the correct order and that pages 69-71 has been deliberately left blank.

YOU MUST HAND IN THIS BOOKLET TO THE SUPERVISOR BEFORE YOU LEAVE THE EXAMINATION ROOM.

MAJOR AREA 1: WOOD TECHNOLOGY

A. Multiple Choice Questions:

Circle the letter of the BEST answer.

1. Softwood trees can be identified by

Skill level 1	
1	
0	
NR	

A. broad leaves.
B. seeds encased in cones.
C. long green needle shaped leaves.
D. seeds that are closed fruits.

2. Hardwood tress can be identified by

Skill level 1	
1	
0	
NR	

A. losing their leaves in winter.
B. broad green leaves.
C. needle shaped leaves.
D. closed fruits on the tree.

3. Identify the tool that could be used for the testing of timber flatness.

Skill level 1	
1	
0	
NR	

A. Try Square.
B. Marking Gauge.
C. Sliding Bevel.
D. Straight Edge.

4. Identify the name of the part labelled **B** of the hand tool given below.

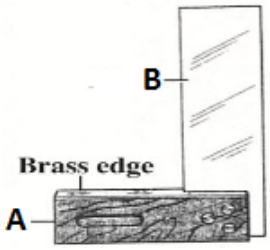

Skill level 1	
1	
0	
NR	

A. Stem.
B. Stock.
C. Blade.
D. Handle.

5. The greatest timber shrinkage took place in the direction of the:

Skill level 1	
1	
0	
NR	

A. Growth Rings.
B. Medullary Rays.
C. Cambium Layers.
D. Sap Wood.

6. Identify the stage of the design process where ***"What remains to be done?"*** took place.

Skill level 1	
1	
0	
NR	

A. Investigating.
B. Devising.
C. Making.
D. Evaluating.

7. Identify the Stage of the design process where ***"Evaluate and document"*** took place?

Skill level 1	
1	
0	
NR	

A. Investigating.
B. Devising.
C. Making.
D. Evaluating.

8. Identify the Stage of the design process where ***"Model or trail the proposal"*** took place.

Skill level 1	
1	
0	
NR	

a. Investigating.
b. Devising.
c. Making.
d. Evaluating.

B. Short and Long Answer Questions:

Answer ALL the questions.

1. **Design**

Explain the outcome of your project that you used in your Internal Assessment (IA); Think about the outcome, did it meet the design brief? How well did it work? Could it be improved?

Skill level 3	
3	
2	
1	
0	
NR	

2. **Manufactured Materials & Manufacturing Process**

a. Name the appropriate uses of the following manufactured materials.

i. Particle Board

Skill level 1	
1	
0	
NR	

ii. Plywood

Skill level 1	
1	
0	
NR	

b. Identify the process for the manufacturing of Laminates.

Skill level 1	
1	
0	
NR	

c. Briefly explain the processes for the manufacturing of Veneers Board.

Skill level 3	
3	
2	
1	
0	
NR	

d. Briefly explain the processes for the manufacturing of Laminates.

Skill level 3	
3	
2	
1	
0	
NR	

3. **Characteristics and Properties of Timber**

a. **Moisture Content of Timber**

i. Calculate the moisture content (MC) of a sample piece of timber weighs 230 grams. After oven trying, the weight of the timber goes down to 200 grams.

Skill level 2	
2	
1	
0	
NR	

ii. State the application of the timber with the calculated moisture content in part (i).

Skill level 1	
1	
0	
NR	

b. **Seasoning of Timber**

i. Describe **ONE** (1) method of timber conversion.

Skill level 1	
1	
0	
NR	

ii. Explain the methods for the seasoning of timber.

Skill level 3	
3	
2	
1	
0	
NR	

iii. Analyse the problems that occur during seasoning.

Skill level 4	
4	
3	
2	
1	
0	
NR	

c. **Timber Conversion**

i. Describe **ONE** (1) method of timber conversion.

Skill level 2	
2	
1	
0	
NR	

ii. Briefly explain **ONE** (1) method for the conversion of timber you listed in part (i).

Skill level 3	
3	
2	
1	
0	
NR	

d. **Preserving and Treatment of Timber**

Skill level 1	
1	
0	
NR	

i. Name **ONE** (1) method of the preservation and treatment of timber.

_____

ii. Analyse the importance of preserving timber.

_____

_____

_____

_____

_____

_____

_____

_____

_____

_____

_____

_____

_____

_____

Skill level 4	
4	
3	
2	
1	
0	
NR	

4. **Project**

Study the dining table below and answer the following questions

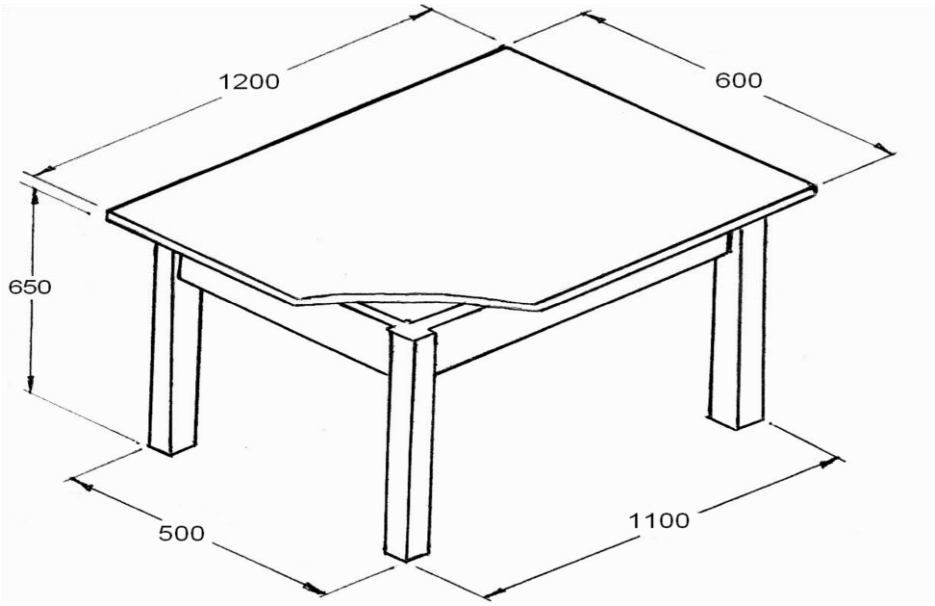

a. Complete the table below with the total length of each component of the dining table.

Table Parts	Size	Total Length (mm)
Leg	75 mm x 75 mm	
Rail	75 mm x 25 mm	
Top	100 mm x 25 mm	

Skill level 3	
3	
2	
1	
0	
NR	

b. Use the information below and calculate the cost of the timber required for the dining table

Table Parts	Size	Material	Cost
Leg	75 mm x 75 mm	Hardwood Tawa	$8.50/m
Rail	75 mm x 25 mm	Hardwood Tawa	$4.30/m
Top	100 mm x 25 mm	Hardwood Tawa	$6.20/m

i. Cost of the 4 Legs

ii. Cost of the 4 Rails

iii. Cost of the Top

Skill level 3	
3	
2	
1	
0	
NR	

Total Cost of the timber for the Dining Table: _____

c. Select another material that could be used for the top of the dining table.

Skill level 1	
1	
0	
NR	

_____

d. **Joints** and **Construction**

Suppose you use Mortise and Tenon joint to join the rail to the leg of the dining table.

Describe any **ONE** (1) tool needed for the construction of the joint.

_____

_____

_____

_____

_____

Skill level 2	
2	
1	
0	
NR	

5. Study the study desk given below and answer the following questions.

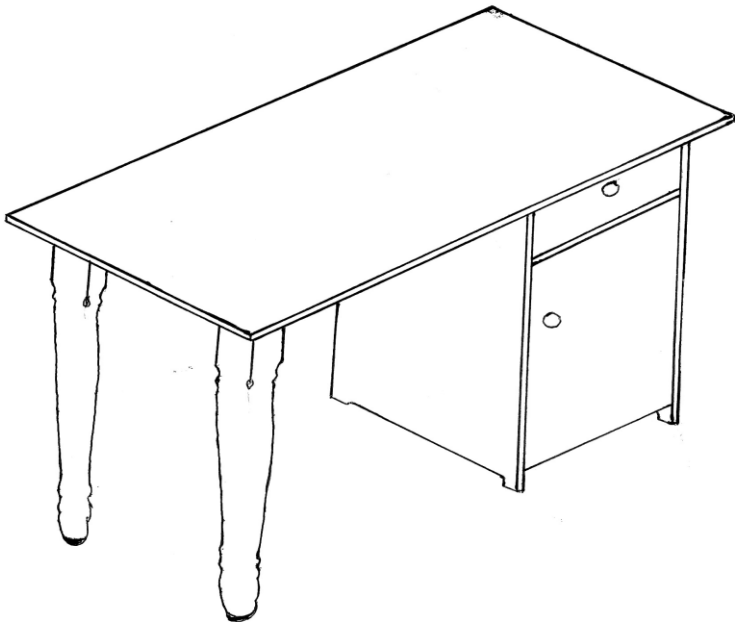

a. The study desk legs need to be turned from a 100mm x 100mm x 800mm timber to the required shape.

i. Analyse in the right order and in point form how to prepare and make the study desk leg to the required shape on a wood lathe machine.

Skill level 4	
4	
3	
2	
1	
0	
NR	

ii. List and evaluate all the cutting tools used in preparing and making the study desk leg to the required shape.

Skill level 4	
4	
3	
2	
1	
0	
NR	

b. Name any wood finishing that could be used for the study desk.

Skill level 1	
1	
0	
NR	

c. Name any type of wood fasteners.

Skill level 1	
1	
0	
NR	

6. Study the diagram below and answer the following questions

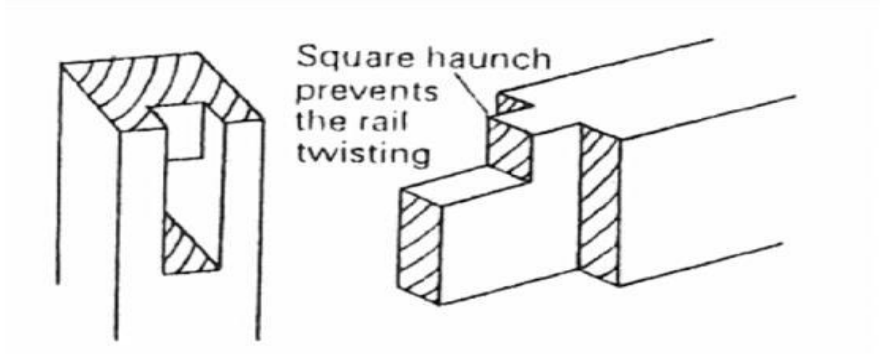

a. Compare the differences between power tools and hand tools

_____

_____

_____

_____

_____

Skill level 2	
2	
1	
0	
NR	

b. Discuss in the right order the steps of construction and the tools and equipment used for each steps correctly and safely from timber preparation to joint cutting.

Steps	Steps of Construction	Tools
1		
2		
3		
4		
5		

Skill level 4	
4	
3	
2	
1	
0	
NR	

c. Evaluate the importance of understanding tools and its uses.

Skill level 4	
4	
3	
2	
1	
0	
NR	

MAJOR AREA 2: METAL TECHNOLOGY

A. Multiple Choice Questions

Circle the letter of the BEST answer.

1. State which of the following is an example of ferrous metal.

Skill level 1	
1	
0	
NR	

A. Cast iron
B. Aluminium
C. Copper
D. Tin

2. Identify the best type of welding machine for welding pipes.

Skill level 1	
1	
0	
NR	

A. Oxy-Acetylene
B. Arc - Welding
C. MIG Welding
D. MAG Welding

3. Name the part of the Oxy-Acetylene plant where oxygen and acetylene mix.

Skill level 1	
1	
0	
NR	

A. Regulator.
B. Welding Tip.
C. Welding Hose.
D. Blow pipe.

4. Identify what Stage of the design process where ***"What remains to be done"*** took place.

Skill level 1	
1	
0	
NR	

A. Investigating
B. Devising
C. Making
D. Evaluating

5. Identify what Stage of the design process where ***"Evaluate and document"*** took place.

Skill level 1	
1	
0	
NR	

A. Investigating
B. Devising
C. Making
D. Evaluating

6. Identify what Stage of the design process where ***"Model or trail the proposal"*** took place.

A. Investigating
B. Devising
C. Making
D. Evaluating

Skill level 1	
1	
0	
NR	

B. Short and Long Answer Questions:

Answer ALL the questions.

1. **Design**

Explain the outcome of your project in your Internal Assessment (IA); think about the outcome, did it meet the design brief? How well did it work? Could it be improved?

Skill level 3	
3	
2	
1	
0	
NR	

2. **Workshop Safety**

Study the cartoon below and answer the questions that follow.

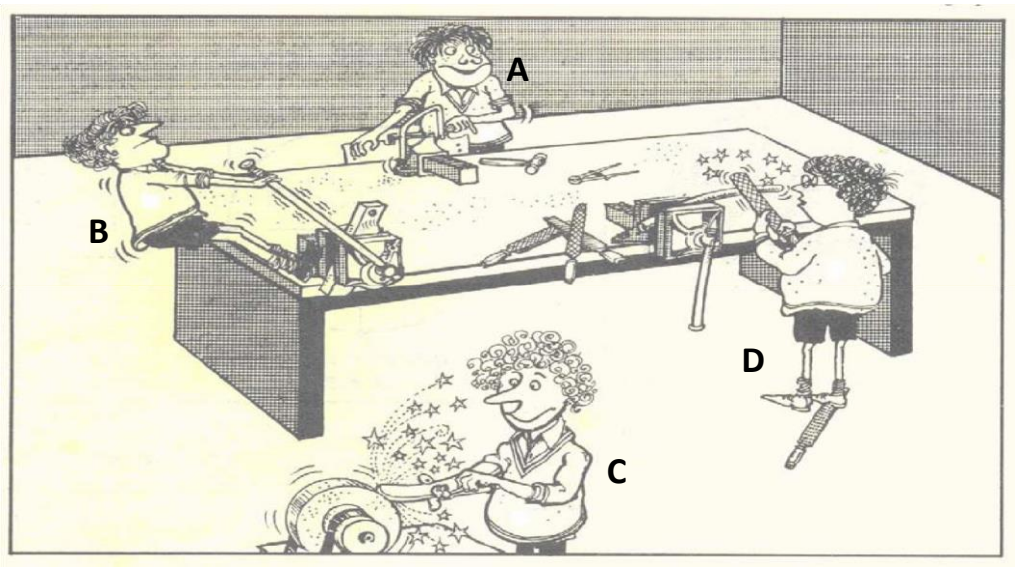

a. Identify **ONE** (1) way in which boy **B** is neglecting common sense safety practice where he is working.

Skill level 1	
1	
0	
NR	

b. Give **ONE** (1) reason why the grinding machine shown is dangerous that it should not be used.

Skill level 1	
1	
0	
NR	

c. Briefly explain the uses of the cutting tools used by boy **D**.

Skill level 3	
3	
2	
1	
0	
NR	

3. **Metal Classification & Molecular Structure**

a. Define a Ferrous Metal.

Skill level 1	
1	
0	
NR	

b. Name **ONE** (1) molecular structure of metal.

Skill level 1	
1	
0	
NR	

c. Name **ONE** (1) non-Ferrous metal.

Skill level 1	
1	
0	
NR	

d. Evaluate the classification of metals.

Skill level 4	
4	
3	
2	
1	
0	
NR	

e. Describe **ONE** (1) process applied in producing steel.

Skill level 2	
2	
1	
0	
NR	

f. Evaluate the processes applied in producing steel.

Skill level 4	
4	
3	
2	
1	
0	
NR	

g. Evaluate the molecular structure of metal

Skill level 4	
4	
3	
2	
1	
0	
NR	

4. **Characteristics of Metal**

a. Give **ONE** (1) physical property of metal.

Skill level 1	
1	
0	
NR	

b. Define Elastic Limit in relation to metal.

Skill level 1	
1	
0	
NR	

c. Describe **ONE** (1) mechanical property of metal.

Skill level 2	
2	
1	
0	
NR	

d. Classify the properties of metal.

Skill level 3	
3	
2	
1	
0	
NR	

e. Evaluate the properties of High Speed Steel as most cutting tools are made out of.

Skill level 4	
4	
3	
2	
1	
0	
NR	

5. **Heat, Forging Process and Metal Finishing Process**

a. Anvil is one of the tools used in forging process. Label the parts of the anvil indicated by letters **A** and **B**.

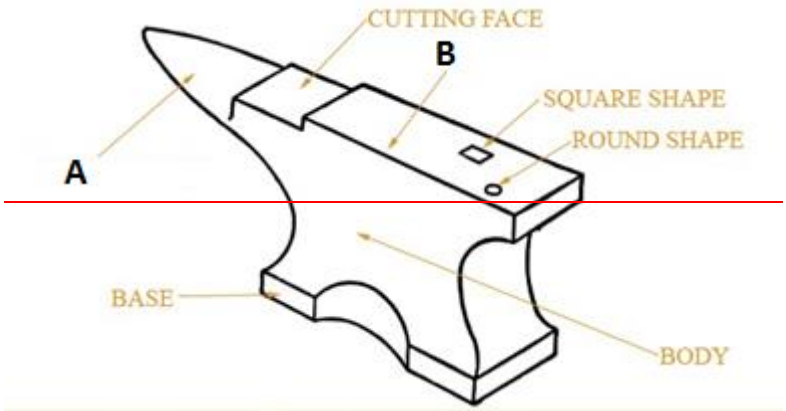

Skill level 1	
1	
0	
NR	

A: _____

Skill level 1	
1	
0	
NR	

B: _____

b. What is the use of the following forging tools during the forging process.

i. Tongs

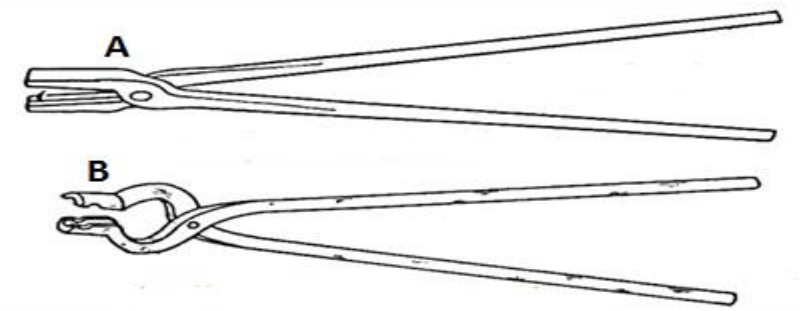

Skill level 1	
1	
0	
NR	

Use: _____

_____

ii. Swages

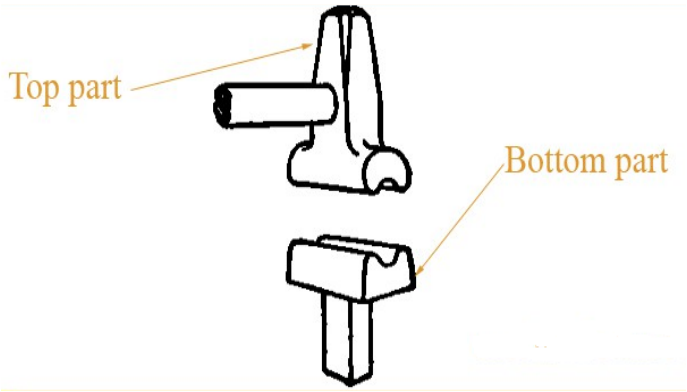

Use: _____

_____

Skill level 1	
1	
0	
NR	

c. Briefly describe why we do tempering in the process of heat treatment of a chisel.

_____

_____

_____

_____

Skill level 2	
2	
1	
0	
NR	

d. Name and evaluate **ONE** (1) type of metal finishing process

Name: _____

_____

_____

_____

_____

_____

_____

_____

_____

_____

_____

Skill level 4	
4	
3	
2	
1	
0	
NR	

6. **Use of tools & equipment**

Study the diagram of the centre punch given below and answer the following questions. Lathe machine used to produce the centre punch.

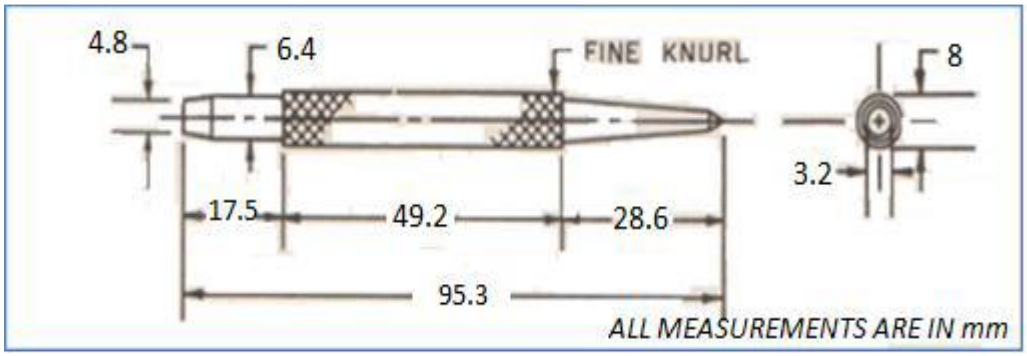

a. Describe the uses of a lathe machine.

Skill level 2	
2	
1	
0	
NR	

b. Explain in point form how you make the centre punch using a lathe machine.

Skill level 3	
3	
2	
1	
0	
NR	

c. List and explain all the cutting tools used in making the centre punch.

Skill level 3	
3	
2	
1	
0	
NR	

d. List and explain all the measuring tools used in making the centre punch.

Skill level 3	
3	
2	
1	
0	
NR	

e. If you are required to apply finishing on the centre punch, name and justify the type of metal finishing process used for the centre punch.

Skill level 4	
4	
3	
2	
1	
0	
NR	

f. Briefly explain the band saw and its uses.

Skill level 3	
3	
2	
1	
0	
NR	

MAJOR AREA 3: FOOD TECHNOLOGY

SECTION A : Multiple Choices Questions:

Circle the letter of the BEST answer.

1. The energy value of five grams of protein is approximately

Skill level 1	
1	
0	
NR	

A. 6 kilojoules
B. 17 kilojoules
C. 38 kilojoules
D. 85 kilojoules

2. The nutrient most likely to be inadequate in the diet of a pregnant teenager is

Skill level 1	
1	
0	
NR	

A. iron.
B. calcium.
C. thiamine.
D. vitamin B12.

3. The metabolic process most characteristic of an individual in a period of high energy usage and low food intake is

Skill level 1	
1	
0	
NR	

A. catabolism.
B. absorption.
C. anabolism.
D. oxidation.

4. High blood cholesterol increases the risk of

Skill level 1	
1	
0	
NR	

A. gout.
B. anaemia.
C. osteoporosis.
D. heart disease.

5. Energy is vital for survival. Identify which of the following nutrients will supplement energy when energy food is lacking in the diet.

Skill level 1	
1	
0	
NR	

A. Water
B. Protein
C. Mineral
D. Vitamins

6. A fatty food is said to be "**off**" if the fat is _____.

Skill level 1	
1	
0	
NR	

A. rancid
B. hydrated
C. emulsified
D. hydrogenated

7. Identify the term for **enrichment** and **fortification** of foods whereby the nutritional value of food is improved.

Skill level 1	
1	
0	
NR	

A. Fermentation
B. Esterification
C. Nutrification
D. Dextrinization

8. Identify which of the following best describes food texture.

Skill level 1	
1	
0	
NR	

A. Coarse, soft and mild
B. Fizzy, powder and flaky
C. Crispy, chewy and glossy
D. Crispy, grainy and smooth

9. Meals planned for the elderly should include food high in _____.

Skill level 1	
1	
0	
NR	

A. sugars and iron
B. sugars and fibre
C. calcium and fibre
D. protein and calcium

10. State which of the following micronutrients acts as a co-enzyme in the metabolism of protein.

Skill level 1	
1	
0	
NR	

A. Riboflavin
B. Pyridoxine
C. Ascorbic acid
D. Nicotinic acid

SECTION B: Short Answer Questions:

Answer ALL the questions.

1. Define the following concepts with examples from your study in Food and Nutrition.

a Producing:

_____

_____

_____

Skill level 1	
1	
0	
NR	

b. High risk foods:

_____

_____

_____

Skill level 1	
1	
0	
NR	

c. Design brief:

_____

_____

_____

Skill level 1	
1	
0	
NR	

d. Assimilation:

_____

_____

_____

Skill level 1	
1	
0	
NR	

e. Dietary fibre:

_____

_____

_____

Skill level 1	
1	
0	
NR	

2. Design an appropriate meal for an old man that is suffering from **GOITRE**.

Skill level 3	
3	
2	
1	
0	
NR	

3. Fats are a good source of Vitamins **A**, **D**, **E**, and **K**.

   a. State **ONE** (1) function of Vitamin **E**.

   _____

   _____

   _____

Skill level 1	
1	
0	
NR	

   b. Give **ONE** (1) food source of Vitamin **K**.

   _____

   _____

   _____

Skill level 1	
1	
0	
NR	

4. Study this case carefully then answer the following questions.

A FAMILY MEAL

Noa stood at the bench serving out the meals. A large steak for Vai, sausages for herself and the children. She piled chips on the children's plates and hope that would fill them up. At least she knew the chips would be eaten. The children all liked chips and the frozen variety were so quick and easy to cook. Vai ….. well, he'd prefer a baked jacket potato with lashings of butter, but he'd eat the chips with no complains. Vegetables. How he looked forward to vegetables; dark green broccoli, pumpkin, beans and fresh green peas. Noa remembered how she used to help prepare the vegetables when she came home from school. But there never seemed to be enough time now to prepare vegetables. Even shopping was becoming a chore. She was tired – working all day, coming home late and having to prepare a meal for everyone. If it weren't for Vai, she'd just pick up some frozen pizzas for the kids, but Vai likes his steak.

a. Describe the factors influencing Noa's food choices.

_____

_____

_____

_____

Skill level 2	
2	
1	
0	
NR	

b. Identify **TWO** (2) foods Noa used that are energy dense.

i. _____

ii. _____

Skill level 1	
1	
0	
NR	

c. Determine the **"RELATIVE IRON CONTENT"** of the meal for Noa, Vai and the children.

_____

_____

_____

Skill level 1	
1	
0	
NR	

d. As a Dietitian, explain ways to monitor the family's meals to ensure that they keep a Healthy Nutritional Status.

Skill level 3	
3	
2	
1	
0	
NR	

SECTION C: EXTENDED RESPONSE

Answer ALL questions in this section.

1. Study the pie graph given below and answer the questions that follow.

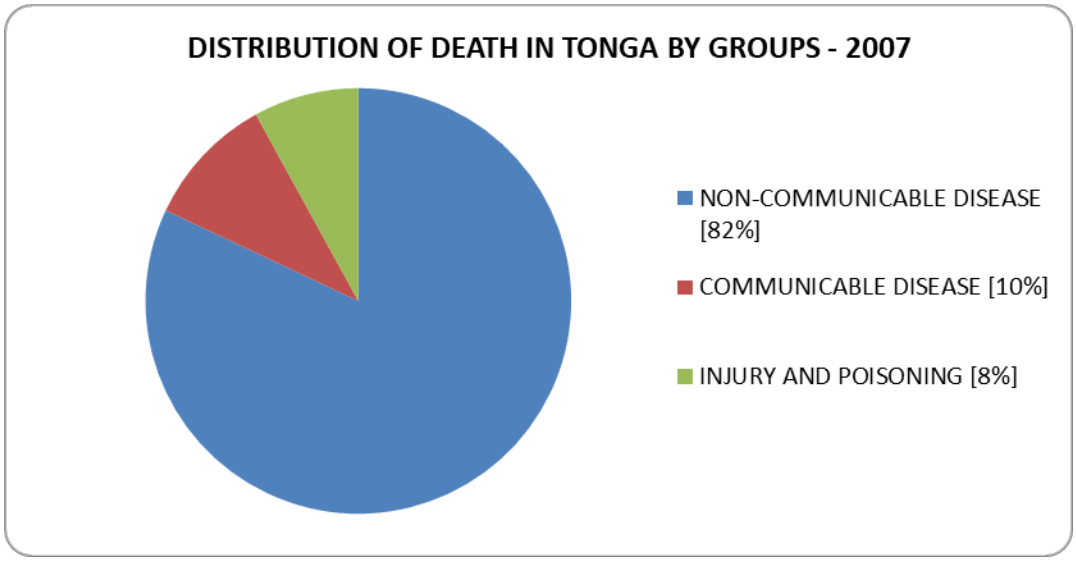

a. Name any **TWO** (2) non-communicable diseases in Tonga.

i. _____

ii. _____

Skill level 1	
1	
0	
NR	

b. Compare the distribution of deaths between those caused by communicable diseases with those caused by non-communicable diseases and give a possible reason for the difference.

_____

_____

_____

_____

_____

_____

_____

_____

_____

_____

_____

Skill level 3	
3	
2	
1	
0	
NR	

2. Differentiate between **malnutrition** and **undernutrition**.

Skill level 3	
3	
2	
1	
0	
NR	

3. Explain why athletes require higher levels of protein in their diet.

Skill level 3	
3	
2	
1	
0	
NR	

4. The Tanoa Plaza Hotel really encourages their staff on Hygienic practices in all aspects. Clearly describe the following practices for the staff to use.

   a. Food hygiene:

Skill level 2	
2	
1	
0	
NR	

   b. Personal hygiene:

Skill level 2	
2	
1	
0	
NR	

5. There is a wide variety of processed food available for consumers today.

   a. Evaluate whether there is an increase or decrease in nutritive value of food products.

Skill level 4	
4	
3	
2	
1	
0	
NR	

b. Discuss with specific examples when using additives and preservatives.

Skill level 4	
4	
3	
2	
1	
0	
NR	

6. Kitchens are where chef and assistants are 100% inspired.

a. List **TWO** (2) characteristics of a safe kitchen floor.

Skill level 2	
2	
1	
0	
NR	

b. Describe why kitchen trash bins must be emptied daily.

Skill level 2	
2	
1	
0	
NR	

7. Part of the school responsibilities is to apply the Canteen Policy and Food Policy. Justify the importance of the School Canteen Policy.

Skill level 4	
4	
3	
2	
1	
0	
NR	

8. Describe ways to prevent food poisoning when storing and preparing food.

Skill level 2	
2	
1	
0	
NR	

9. Fresh designers use the design process effectively in product development. Draw the **Design Process**.

Skill level 3	
3	
2	
1	
0	
NR	

10. List **TWO** (2) important information needed while preparing a time and work plan for a cooking session.

Skill level 2	
2	
1	
0	
NR	

11. You have been requested to design a buffet dinner for your School Staff End of Year Celebration. You must provide for no more than 50 members.

    a. Describe the factors that you must consider when selecting the dish for the buffet dinner.

Skill level 2	
2	
1	
0	
NR	

    b. Calculate the cost of ingredients for one dish that you would prepare for the function.

Skill level 4	
4	
3	
2	
1	
0	
NR	

MAJOR 4: TEXTILES AND GARMENT CONSTRUCTION

A. Multiple Choices Questions:

Circle the letter of the BEST answer.

1. Pilling, which forms on the surface of fabrics will be more prominent in _____.

Skill level 1	
1	
0	
NR	

   A. silk fabrics
   B. linen fabrics
   C. rayon fabrics
   D. woollen fabrics

2. Examples of notions which add finishing touches to garments are _____.

Skill level 1	
1	
0	
NR	

   A. zipper, elastic and scissors
   B. press studs, lace and braids
   C. elastic, buckle and tracing wheel
   D. hooks and eyes, lace and tape measures

3. Identify is the term that enables a fibre to return to its original state after crushing.

Skill level 1	
1	
0	
NR	

   A. Absorbency
   B. Durability
   C. Resiliency
   D. Elasticity

4. The fabric construction method that involves two or more fibres, joined together producing factors with dimensional stability, opaqueness and body is _____.

Skill level 1	
1	
0	
NR	

   A. felting
   B. knitting
   C. braiding
   D. bonding

5. State which of the following designs can be used to illustrate rhythm on a garment.

A. A created design
B. A repeated design
C. An applied design
D. A structural design

Skill level 1	
1	
0	
NR	

6. Fabric softeners are used in the washing of acrylic fabrics to

A. minimize ironing.
B. increase absorbency.
C. reduce static electricity.
D. enhance crease resistance.

Skill level 1	
1	
0	
NR	

7. The illusion created when using short diagonal lines on a person's figure is

A. thinness.
B. smallness.
C. slimming look.
D. increased width.

Skill level 1	
1	
0	
NR	

8. An important factor to consider when selecting a pattern is to choose

A. styles that are the most expensive.
B. design lines that will give a stylish look.
C. design that is flattering to the figure type.
D. styles that have the most decorative features.

Skill level 1	
1	
0	
NR	

9. A fold of fabric which makes a 45° angle to the selvedge will produce a

A. bias
B. weft
C. warp
D. true bias

Skill level 1	
1	
0	
NR	

10. Identify which of the following is NOT an element of design.

A. Lines.
B. Colour.
C. Texture.
D. Balance.

Skill level 1	
1	
0	
NR	

SECTION B: Short Answers Questions:

Answer ALL the questions in this section.

1. Define the following terms correctly.

   a. Cotton:

Skill level 1	
1	
0	
NR	

   b. Free-hand cutting pattern:

Skill level 1	
1	
0	
NR	

   c. Design brief:

Skill level 1	
1	
0	
NR	

   d. Investigating:

Skill level 1	
1	
0	
NR	

   e. Design Process:

Skill level 1	
1	
0	
NR	

f. Manufactured fibres:

_____

_____

_____

Skill level 1	
1	
0	
NR	

2. Complete the table below to display the differences in design desires for the given figure types.

	Very small and chubby	**Very big and skinny**
Colour to be used.		
Purpose of clothing.		
Lines to be used.		

Skill level 3	
3	
2	
1	
0	
NR	

3. Describe the importance of the following in constructing a garment.

a. Basting:

_____
_____
_____
_____

Skill level 2	
2	
1	
0	
NR	

b. Stay-stitching:

_____
_____
_____
_____

Skill level 2	
2	
1	
0	
NR	

c. Darts:

_____
_____
_____
_____

Skill level 2	
2	
1	
0	
NR	

4. Explain the purpose of using the following techniques in sewing.

a. Clipping:

_____
_____
_____
_____

Skill level 2	
2	
1	
0	
NR	

b. French seam:

_____
_____
_____
_____

Skill level 2	
2	
1	
0	
NR	

SECTION C: Extended Response Questions:

Answer ALL questions in this section.

1. Study the picture given below and answer the questions that follow.

a. Evaluate the quality of the garment in the picture in terms of how the Elements and Principles of Design were used successfully and / or ineffectively.

Skill level 4	
4	
3	
2	
1	
0	
NR	

b. Explain how design is used to emphasize the body features such as an attractive face and attractive legs.

Skill level 3	
3	
2	
1	
0	
NR	

c. State **ONE** (1) effect of coarse or rough fabrics on a figure.

Skill level 1	
1	
0	
NR	

2. Within a culture, there are variations in dress and costume. Explain how an individual's cultural role influences his or her way of dressing or costume.

Skill level 3	
3	
2	
1	
0	
NR	

3. Describe how to handle these problems when using the sewing machine.

   a. breaking needle thread:

Skill level 2	
2	
1	
0	
NR	

   b. skipping of stitches:

Skill level 2	
2	
1	
0	
NR	

4. Discuss the importance of balance on a design.

Skill level 4	
4	
3	
2	
1	
0	
NR	

5. Read the extract given below and answer the question that follow.

> "A lot of women see pretty dresses on young models and immediately think they can wear them, but you really must think about your body proportions before you select a style for yourself".

Discuss the reason for the phrase **"…. you really must think about your body proportions before you select a style for yourself ".**

Skill level 4	
4	
3	
2	
1	
0	
NR	

6. A Heilala Festival female contestant wishes to wear a winner's attire for the crowning night.

   a. On the figure provided:
      - Sketch the front view of the dress.
      - Label all the design lines.
      - Identify all emphasis made on this dress front view.

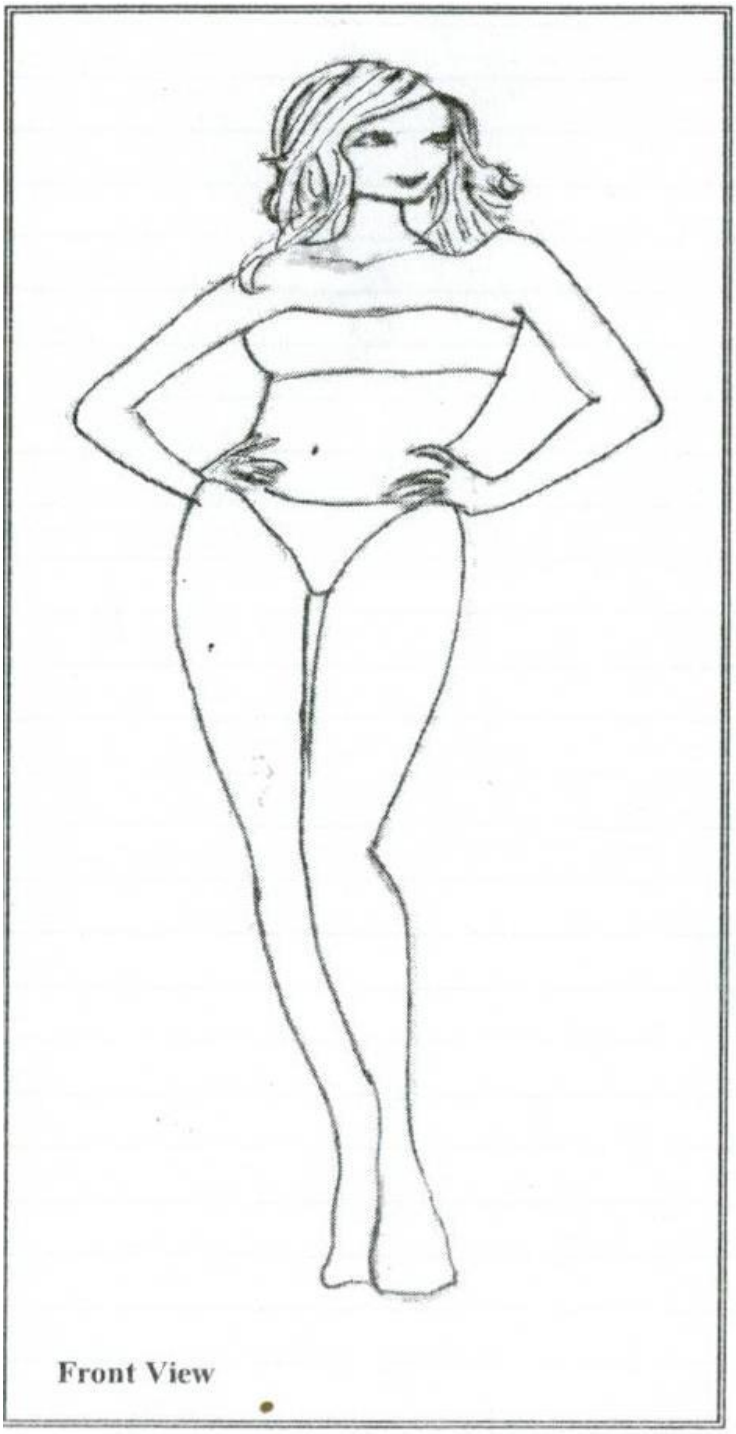

Skill level 4	
4	
3	
2	
1	
0	
NR	

b. Explain the importance of lines in the dress design.

Skill level 3	
3	
2	
1	
0	
NR	

c. Give a suitable fabric for the dress and the reason for your choice.

Skill level 2	
2	
1	
0	
NR	

7. Discuss the importance of using proper electric cord for the safety of operating the sewing machine.

Skill level 3	
3	
2	
1	
0	
NR	

8. Give the appropriate way of removing the following stains.

   a. fresh blood stain on a brand new garment.

   _____
   _____
   _____

Skill level 1	
1	
0	
NR	

   b. mildew stain on a white shirt.

   _____
   _____
   _____

Skill level 1	
1	
0	
NR	

   c. fresh chewing gum on a short pants.

   _____
   _____
   _____

Skill level 1	
1	
0	
NR	

9. Discuss the importance of an instructional paper in the commercial pattern envelope.

   _____
   _____
   _____
   _____
   _____
   _____
   _____
   _____
   _____
   _____
   _____
   _____

Skill level 3	
3	
2	
1	
0	
NR	

MAJOR AREA 5: TECHNICAL GRAPHICS

A. Multiple Choice Questions

Circle the letter of the BEST answer.

1. Identify the drawing where 30º is use for projection.

   A. Perspective drawing.
   B. Orthographic drawing.
   C. Isometric drawing.
   D. Oblique drawing.

Skill level 1	
1	
0	
NR	

2. Identify the Stage of the design process where ***"What remains to be done"*** took Place.

   A. Investigating.
   B. Devising.
   C. Making.
   D. Evaluating.

Skill level 1	
1	
0	
NR	

3. Identify the Stage of the design process where ***"Evaluate and document"*** took Place.

   A. Investigating.
   B. Devising.
   C. Making.
   D. Evaluating.

Skill level 1	
1	
0	
NR	

4. Identify the Stage of the design process where ***"Model or trail the proposal"*** took place.

   A. Investigating.
   B. Devising.
   C. Making.
   D. Evaluating.

Skill level 1	
1	
0	
NR	

B. Short and Long Answer Questions.:

Answer ALL the questions

1. **Design**

a. Describe the stages of the design process

Skill level 2	
2	
1	
0	
NR	

b. Explain the outcome of your project that you used in your Internal Assessment (IA); Think about the outcome, Did it meet the design brief? How well did it work? Could it be improved?

Skill level 3	
3	
2	
1	
0	
NR	

2. **Standard Lines & Symbols**

a. Complete the Table below with **ONE** (1) application of the line types.

	Line Types	**Line Application**	
i.	Continuous Thin Line		**Skill level 1** 1 0 NR
ii.	Thin Dashed Line		**Skill level 1** 1 0 NR
iii.	Thick Chain Line		**Skill level 1** 1 0 NR
iv.	Chain Line, Thick at the ends and at change of direction nut Thin elsewhere		**Skill level 1** 1 0 NR

b. Complete the table below by the name of the following technical drawing symbols.

Engineering Drawings:

	Technical Drawing Symbols	**Name of the Technical Drawing Symbols**
i.	R	
ii.	℄	
iii.	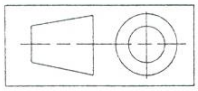	

Skill level 1	
1	
0	
NR	

Skill level 1	
1	
0	
NR	

Skill level 1	
1	
0	
NR	

3. **Interpenetration of Solid**

Given below is the plan and incomplete elevation of interpenetration Cylinders.

a. Identify the procedures of solving intersection of solids.

Skill level 1	
1	
0	
NR	

b. Complete the elevation below showing the intersection of the cylinders. Show all construction lines.

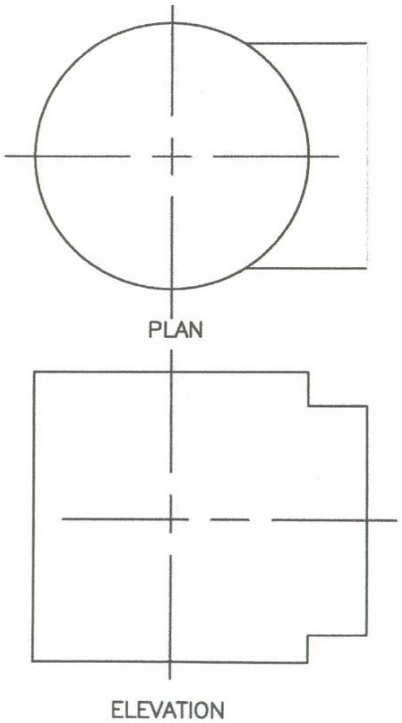

Skill level 3	
3	
2	
1	
0	
NR	

c. Draw **ONE** (1) complete turn of a left-handed square section spring, 40 mm outside diameter, 60 mm pitch, made from 5 mm square bar.

Skill level 4	
4	
3	
2	
1	
0	
NR	

4. **Vector Diagrams & Forces:**

a. Describe the following terms.

i. Wind load

Skill level 2	
2	
1	
0	
NR	

ii. Dead load

Skill level 2	
2	
1	
0	
NR	

b. Determine the resultant force and its point of application of the co-planar and non-concurrent force system given below.

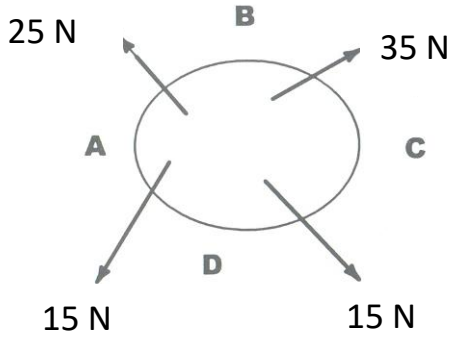

Skill level 3	
3	
2	
1	
0	
NR	

c. Given below is the Space diagram of parallel forces acting on a beam. Use the Link or Funicular and Force or Load line with Polar diagram to determine the:

i. Position of the resultant

ii. Reaction at the supports RL and RR

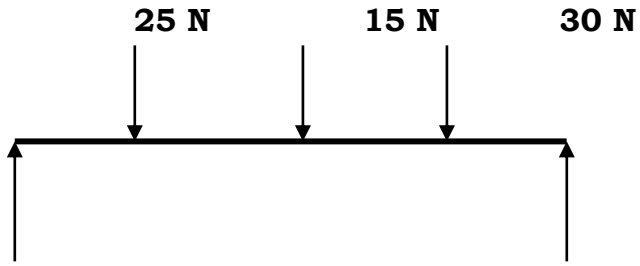

RL = _____ **RR =** _____

Scale: _____

Skill level 3	
3	
2	
1	
0	
NR	

Skill level 3	
3	
2	
1	
0	
NR	

5. **Geometrical Construction & Development**

a. Study the Bushed Roller Block given below and answer the following questions.

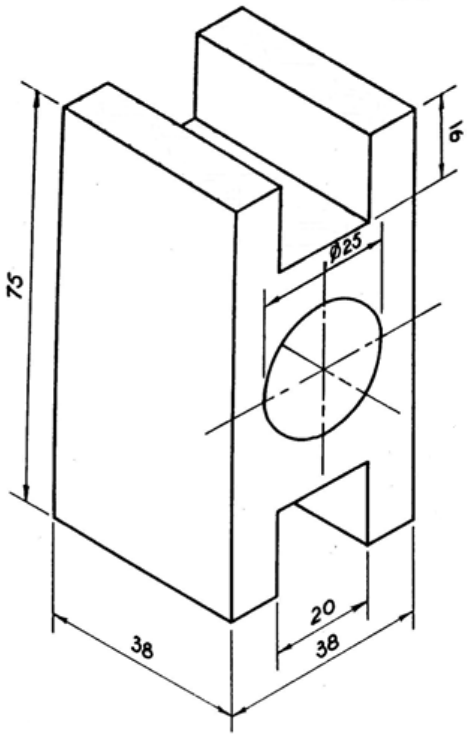

If you are asked to draw the given Bushed Roller Block using **2 : 1** scale.

Skill level 1	
1	
0	
NR	

i. Identify the total length of the scaled diagram. _____

Skill level 1	
1	
0	
NR	

ii. Identify the total width of the scaled diagram. _____

Skill level 1	
1	
0	
NR	

iii. Identify the total height of the scaled diagram. _____

b. Bisect angle ABC

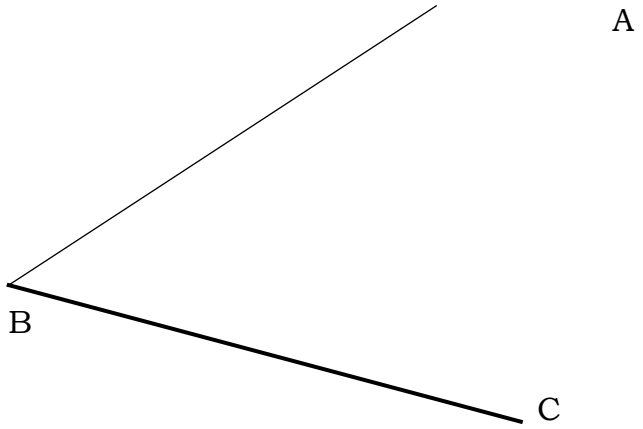

Skill level 2	
2	
1	
0	
NR	

c. Identify the meaning scale **1 : 2**.

_____

Skill level 1	
1	
0	
NR	

d. Compare one point and two point perspective drawing.

_____

_____

_____

Skill level 1	
1	
0	
NR	

e. Study the given square pyramid and answer the following questions.

i. Find the true length of the given sides of the square pyramid using rotation method.

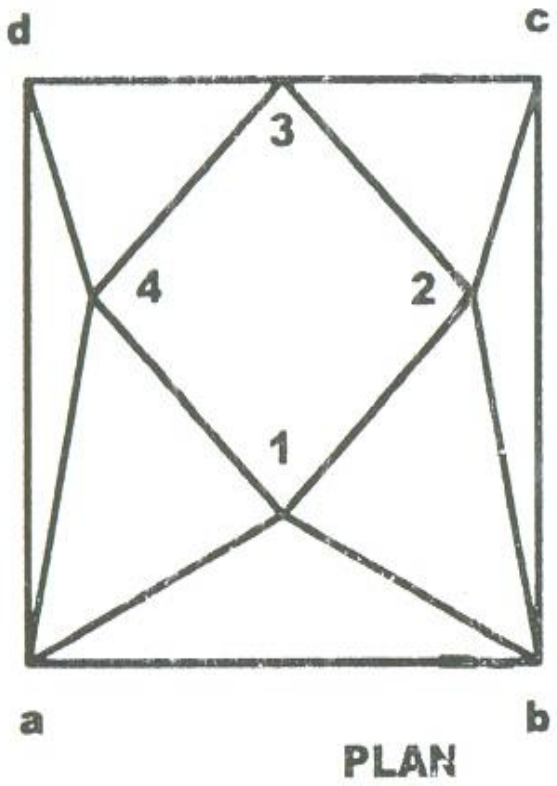

1a = _____

2b = _____

3c = _____

4d = _____

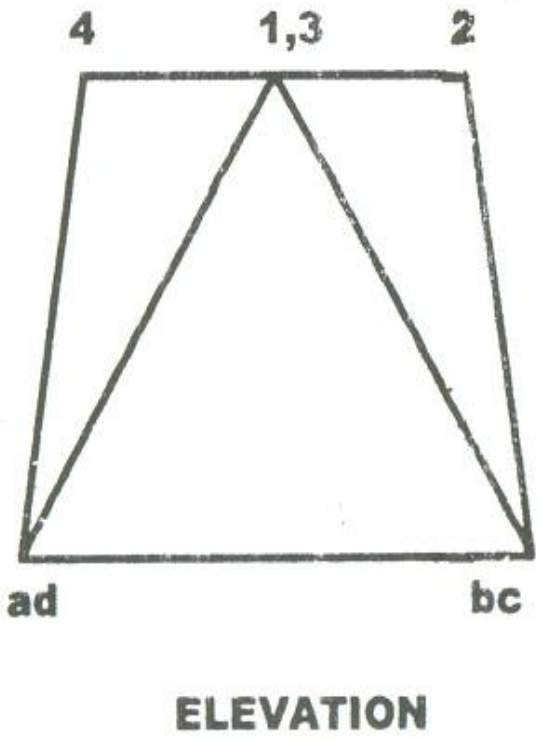

Skill level 4	
4	
3	
2	
1	
0	
NR	

ii. Draw the development of the given square pyramid using the triangular method.

Skill level 4	
4	
3	
2	
1	
0	
NR	

f. Draw a regular pentagon with 35 mm.

Skill level 3	
3	
2	
1	
0	
NR	

6. **True Shape, Orthographic and Assembly Drawing**

a. Projection of the triangle ABC onto the horizontal and vertical planes is given below. Use any method of your choice to determine the true shape of triangle ABC and true angle of inclination.

Skill level 3	
3	
2	
1	
0	
NR	

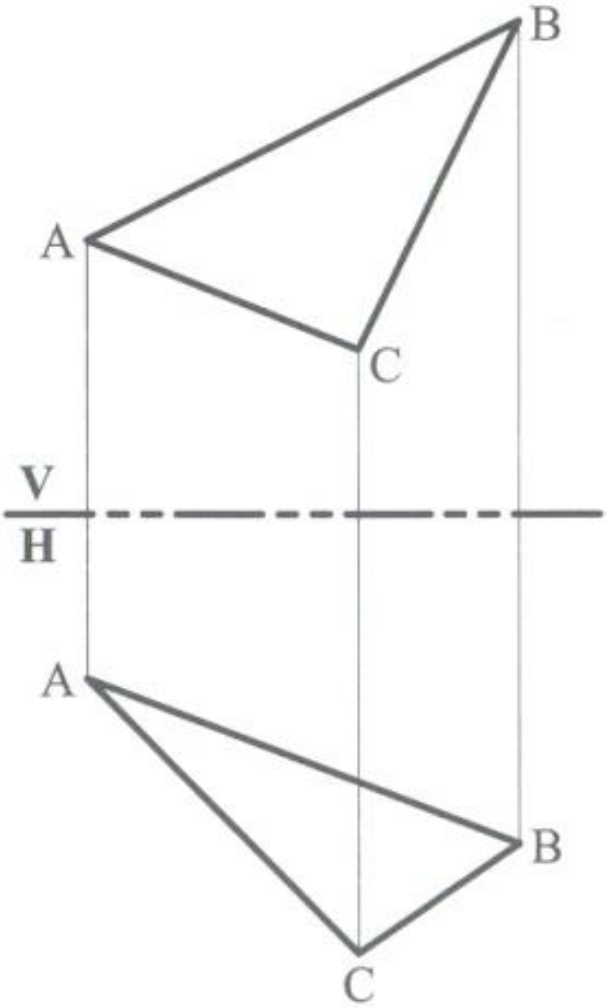

b. A CI Jaw Support is given below. Draw, with hidden details, the following views of the **CI Jaw Support** in **Third Angle Projection**:

Skill level 4	
4	
3	
2	
1	
0	
NR	

i. A front view from direction A

ii. A side view from direction B, and

Use any scale of your choice, give 6 main dimension, and identify the drawing

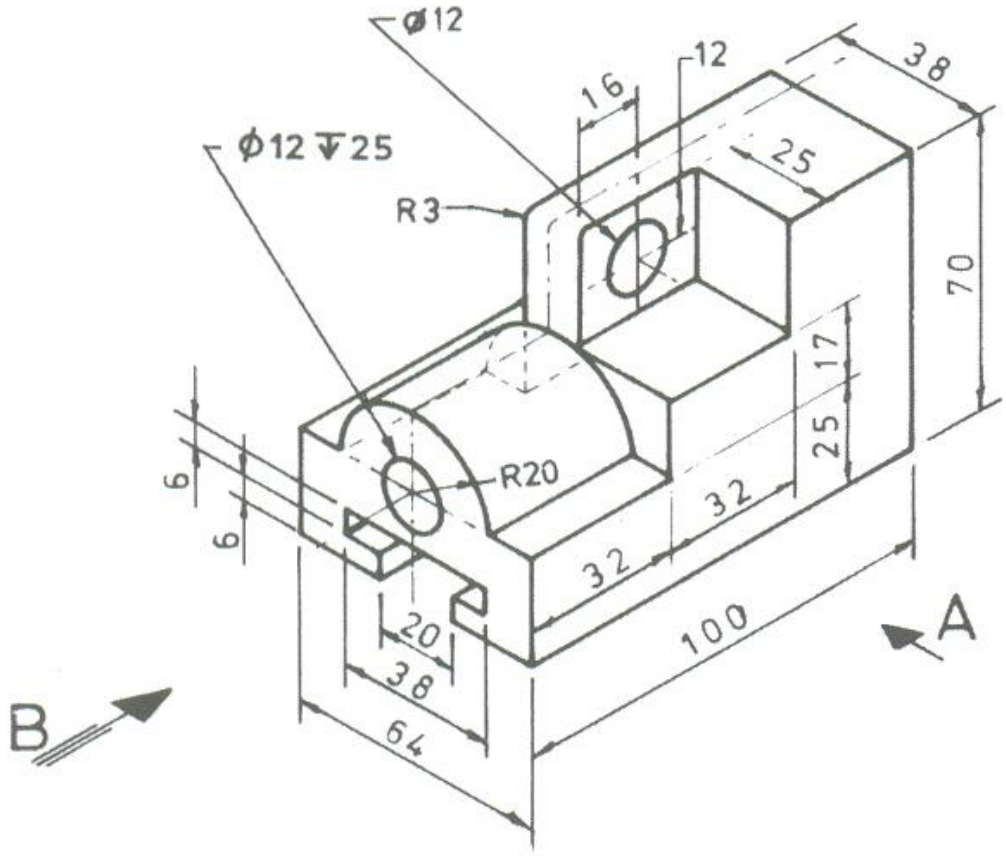

CI JAW SUPPORT

DO QUESTION CI JAW SUPPORT IN THIS PAGE

Skill level 4	
4	
3	
2	
1	
0	
NR	

c. **Simple Assembly Drawing**

Below is an exploded front view of a CI Support Bracket

Draw the sectional assembly front view of the CI Support Bracket, taking into consideration the shaft, bushes and the web.

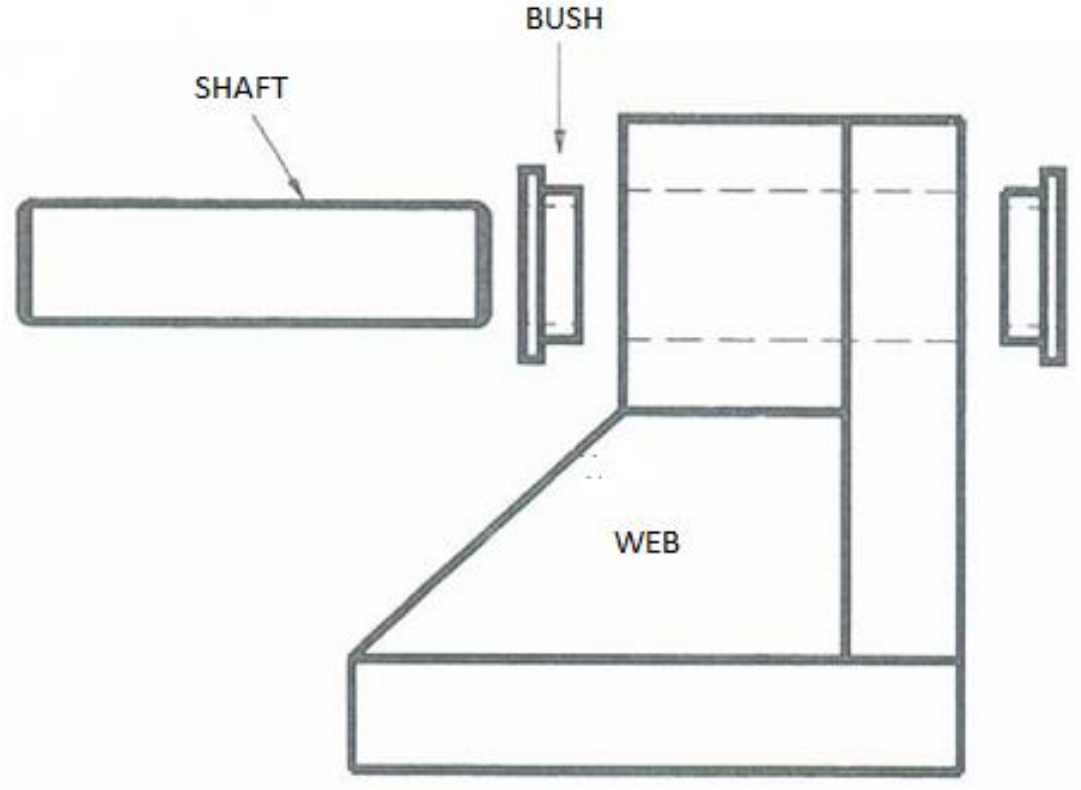

CI Support Bracket

DO QUESTION CI SUPPORT BRACKET IN THIS PAGE

Skill level 4	
4	
3	
2	
1	
0	
NR	

THIS PAGE HAS BEEN DELIBERATELY LEFT BLANK.

THIS PAGE HAS BEEN DELIBERATELY LEFT BLANK.